MC800S Wiring Diagram

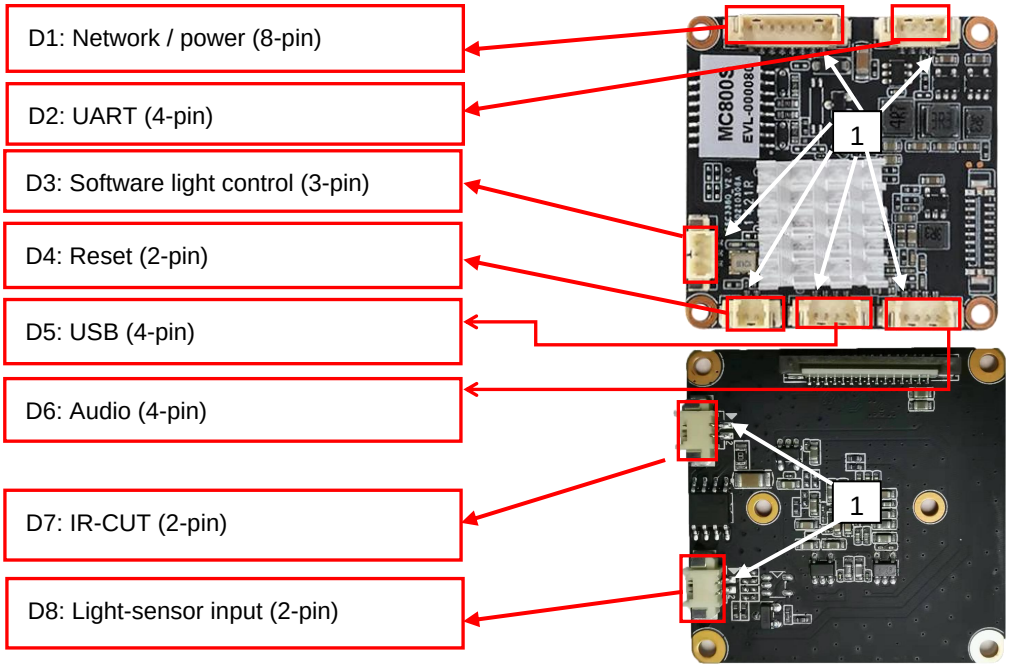

Note: White arrows indicate pin 1.

Connector pin definitions

Code	Interface function	No.	Pin definition	Pin function
D1	8-pin network & power interface	1	DC 12V+	12 V DC input
		2	GND	Ground
		3	RJ45_6	Ethernet RX differential signal, RJ6
		4	RJ45_3	Ethernet RX differential signal, RJ3
		5	RJ45_2	Ethernet TX differential signal, RJ2
		6	RJ45_1	Ethernet TX differential signal, RJ1
		7	LED+	Network link LED positive
		8	LED+	Network status LED positive
D2	4-pin UART interface	1	GND	Ground
		2	AF TX	Autofocus interface
		3	AF_RX	NC
		4	SPK_EN	Amplifier I/O
D3	3-pin software light-control interface	1	PWM0	Software-controlled warm light
		2	PWM1	Software-controlled infrared light
		3	GND	Ground
D4	2-pin reset interface	1	RESET	Reset
		2	GND	Ground
D5	4-pin USB interface	1	USB_3.3V	
		2	USB_D+	
		3	USB_D-	
		4	GND	
D6	4-pin audio interface	1	GND	Ground

		2	AUDIO_OUT	External speaker
		3	AUDIO_IN	Active / passive microphone
		4	GND	Ground
D7	2-pin IR-CUT interface	1	IR-CUT control	Output
		2	IR-CUT control	Output
D8	2-pin LED board light-sensor input interface	1	CDS_IN	Infrared light control signal input
		2	GND	Ground